⚠ WARNING:

CHOKING HAZARD–Small parts.
Not for children under 3 years.

⚠ ATTENTION :

DANGER D'ÉTOUFFEMENT – Petites pièces. Ne convient pas aux enfants de moins de 3 ans.

MY LITTLE PONY

5+

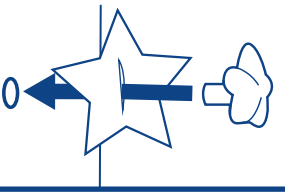

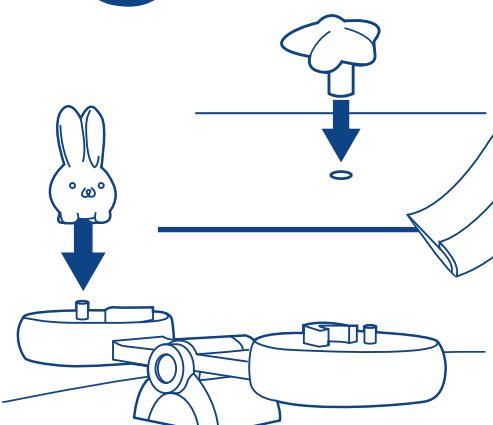

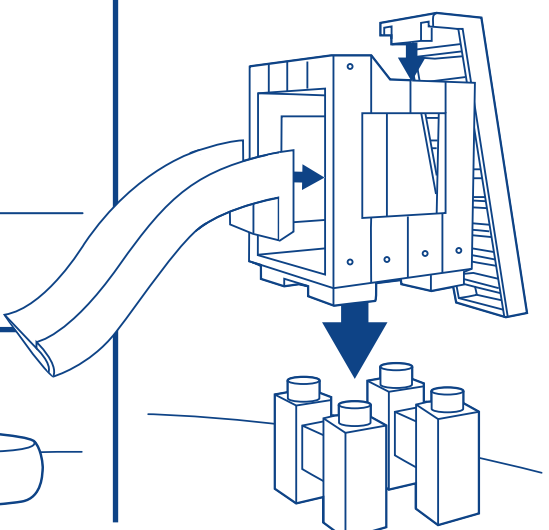

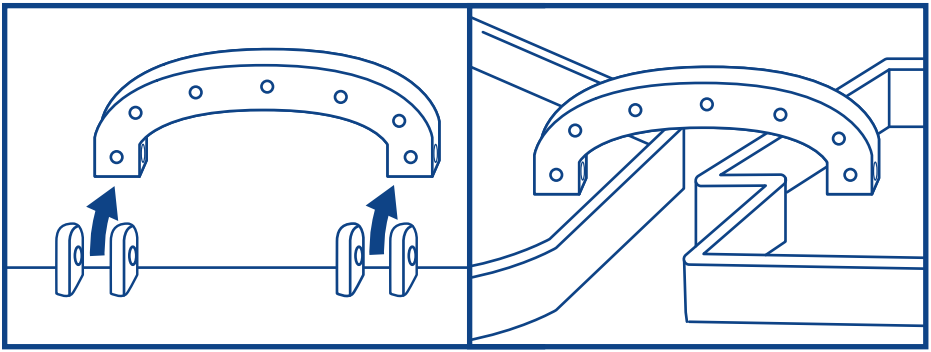

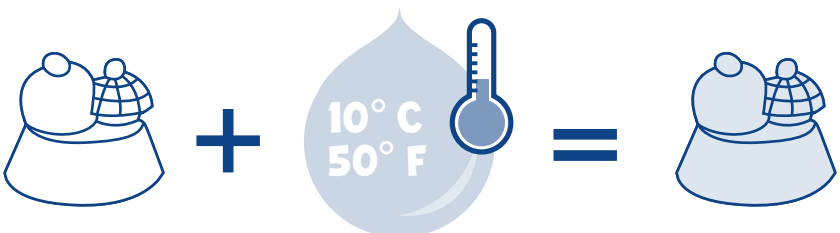

MY LITTLE PONY and HASBRO and all related trademarks and logos are trademarks of Hasbro, Inc. © 2023 Hasbro. Hasbro, Pawtucket, RI 02861-1059 USA. HASBRO CANADA, LONGUEUIL, QC, CANADA J4G 1G2. US/CANADA TEL. 1-800-255-5516. Importado por: HASBRO DE MÉXICO, S. DE R.L. DE C.V. Boulevard Manuel Ávila Camacho #32, piso 3, Colonia Lomas de Chapultepec I Sección, Alcaldía Miguel Hidalgo, C.P. 11000, Ciudad de México, México. Centro de Servicio para México: TEL. 5876-2998 y para el interior de la República TEL. 01-800-7-12-62-25. Manufactured by/Produs de: Hasbro SA, Rue Emile-Boéchat 31, 2800 Delémont, CH. Represented by/Reprezentat de: Hasbro, De Entree 240, 1101 EE Amsterdam, NL. (GB) Hasbro UK Ltd., P.O. Box 43, Newport, NP19 4YH, UK. (FR) Üretici Firma Bilgileri: Hasbro SA, Rue Emile-Boéchat 31, 2800 Delémont Isviçre TEL +41 324210800. Hasbro Oyuncak San. ve Tic. A.Ş. tarafından ithal edilmiştir. Tüketici Hizmetleri: Burhaniye Mah. Abdullahağa Cad. No: 51/2 34676 Beylerbeyi İstanbul Türkiye TEL +90 2164229010.

F6440 PN00084800